52011 Series (330 to 990 lbs)

Drawing

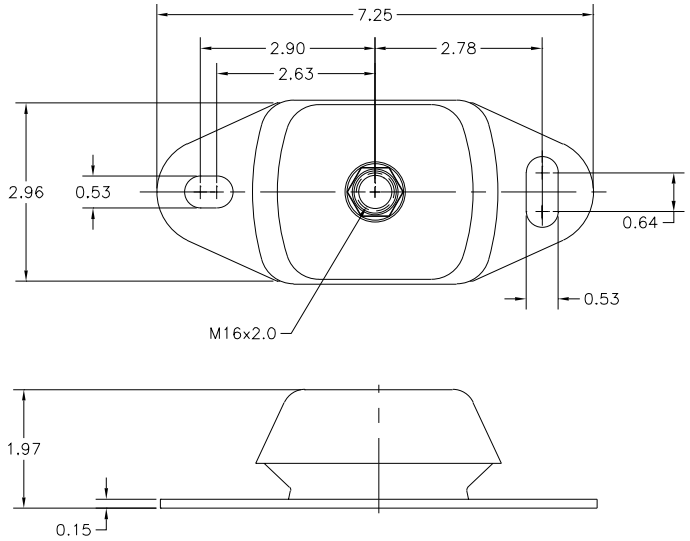

Load Ratings

Part Number	Max. Load (lbs)
52011-45	330
52011-55	465
52011-65	660
52011-75	990
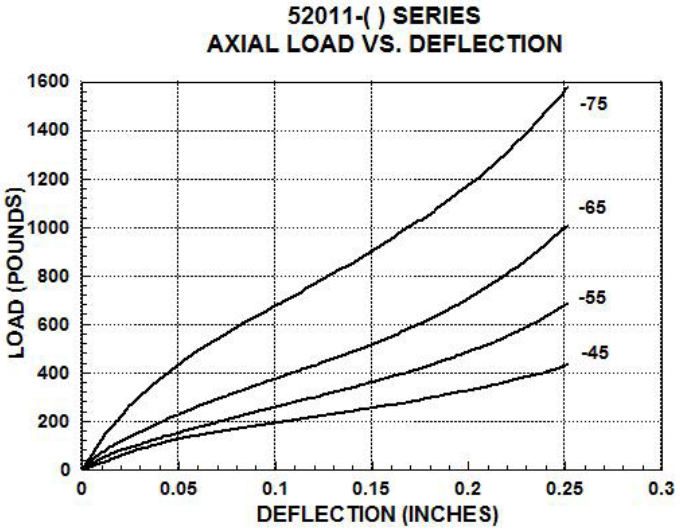
Stiffness Curves